Gasket selection and verification

COPY COMPLIANT to the original document resident on the computer system at the time of printing

Index

1. Purpose 3
2. Abbreviations. 3
3. Scope. 3
4. Basic knowledge. 5
4.1. Gasket definition and typical joint failures. 5
4.2. Tightness and leakage. 6
5. Traditional rules (ASME BPVC Appendix 2). 8
6. Tightness-based rules (PVRC). 10
6.1. Standard leak. 11
6.1. Minimum tightness. 11
6.1. Gasket selection procedure. 12
7. References 17
8. Annex A: Open gasket vs. controlled compression gasket. 18
9. Annex B: ASME BPVC gasket tables. 19

COPY COMPLIANT to the original document resident on the computer system at the time of printing

1. Purpose

This document defines the guidelines to for the selection and the verification of gaskets.

2. Scope and field of application

This procedure is applicable to all pressure components that requires gaskets (O-ring excluded) to guarantee the absence of leakage.

The procedure is applicable for the Nova Milanese and La Spezia plants.

3. Abbreviations.

$\boldsymbol{a} = PVRC\ gasket\ parameter\ -\ exponent\ of\ loading\ curve\ [-]$

$\boldsymbol{A_i} = wet\ area\ [mm^2]$

$\boldsymbol{A_g} = gasket\ area\ [mm^2]$

$\boldsymbol{b} = effective\ gasket\ seating\ width\ [-]$

$\boldsymbol{b_0} = basic\ gasket\ seating\ width [-]$

$\boldsymbol{BPVC} = boiler\ pressure\ vessel\ code$

$\boldsymbol{E_G} = unloading\ secant\ modulus\ of\ elasticity\ of\ the\ gasket\ [MPa]$

$\boldsymbol{e_{Q_A}} = gasket\ thickness\ at\ assembly\ condition\ [mm]$

$\boldsymbol{F_{bolt}} = total\ tightening\ force\ [N]$

$\boldsymbol{G} = diameter\ at\ location\ of\ gasket\ load\ [mm]$

$\boldsymbol{G_b} = PVRC\ gasket\ parameter\ -\ loading\ curve\ [MPa]$

$\boldsymbol{G_s} = PVRC\ gasket\ parameter\ -\ unloading\ curve\ [MPa]$

$\boldsymbol{ID} = gasket\ inside\ diameter\ [mm]$

$\boldsymbol{m} = gasket\ factor\ [-]$

$\boldsymbol{N} = gasket\ width\ [mm]$

$\boldsymbol{y} = gasket\ seating\ load [MPa]$

$\boldsymbol{L^*_{rm}} = unit\ mass\ leak\ rate = 1\frac{mg}{s}\ for\ a\ 150\ mm\ OD\ gasket\ in\ a\ joint$

$\boldsymbol{L_{rm}} = mass\ leak\ rate\ [\frac{mg}{s}]$

COPY COMPLIANT to the original document resident on the computer system at the time of printing

$\boldsymbol{l_{rm}} = unit\ mass\ leak\ rate\ [\frac{mg}{s\ mm}]$

$\boldsymbol{OD} = gasket\ outside\ diameter\ [mm]$

$\boldsymbol{PVRC} = pressure\ vessel\ research\ council$

$\boldsymbol{p} = internal\ pressure\ [MPa]$

$\boldsymbol{p^*} = atmospheric\ pressure\ [MPa]$

$\boldsymbol{p_{hydrotest}} = hydrotest\ pressure\ [MPa]$

$\boldsymbol{Q_A} = surface\ pressure\ at\ assembly\ condition\ [MPa]$

$\boldsymbol{Q_{min(L)}} = minimum\ surface\ pressure\ to\ obtain\ the\ tightness\ class\ on\ assembly\ [MPa]$

$\boldsymbol{Q_{smin(L)}} = minimum\ surface\ pressure\ to\ obtain\ the\ tightness\ class\ after\ offloading [MPa]$

$\boldsymbol{S_a} = gasket\ seating\ stress\ [MPa]$

$\boldsymbol{S_g} = gasket\ seating\ stress\ [MPa]$

$\boldsymbol{S_L} = minimum\ allowable\ value\ of\ operating\ gasket\ stress\ [MPa]$

$\boldsymbol{S_{m1}} = minimum\ required\ gasket\ stress\ [MPa]$

$\boldsymbol{S_{m2}} = gasket\ stress\ after\ application\ of\ internal\ pressure\ [MPa]$

$\boldsymbol{S_L} = minimum\ allowable\ value\ of\ operating\ gasket\ stress\ [MPa]$

$\boldsymbol{T_c} = tightness\ constant\ [-]$

$\boldsymbol{T_r} = tightness\ ratio\ [-]$

$\boldsymbol{T_p} = adimensional\ tightness\ parameter\ [-]$

$\boldsymbol{T_{p\,a}} = adimensional\ assembly\ tightness\ parameter\ [-]$

$\boldsymbol{T_{p\,min}} = minimum\ required\ tightness\ to\ ensure\ satisfactoy\ leakage\ performance\ [-]$

$\boldsymbol{W} = required\ bolt\ load\ [N]$

$\boldsymbol{W_{m1}} = ASME\ BPVC\ minimum\ required\ bolt\ load\ for\ operating\ conditions\ [N]$

$\boldsymbol{W_{m2}} = ASME\ BPVC\ minimum\ required\ bolt\ load\ for\ gasket\ seating\ [N]$

COPY COMPLIANT to the original document resident on the computer system at the time of printing

4. Basic knowledge.

4.1. Gasket definition and typical joint failures.

A gasket is the interface between two imperfect surfaces, its functions is to prevent leakage of liquids or gases under changing conditions of thermally or mechanically induced stress. In theory, if the faces of flanges could be made to mate perfectly (i.e., ideally flat and parallel to each other) no gasket would be necessary: this condition is not really feasible.

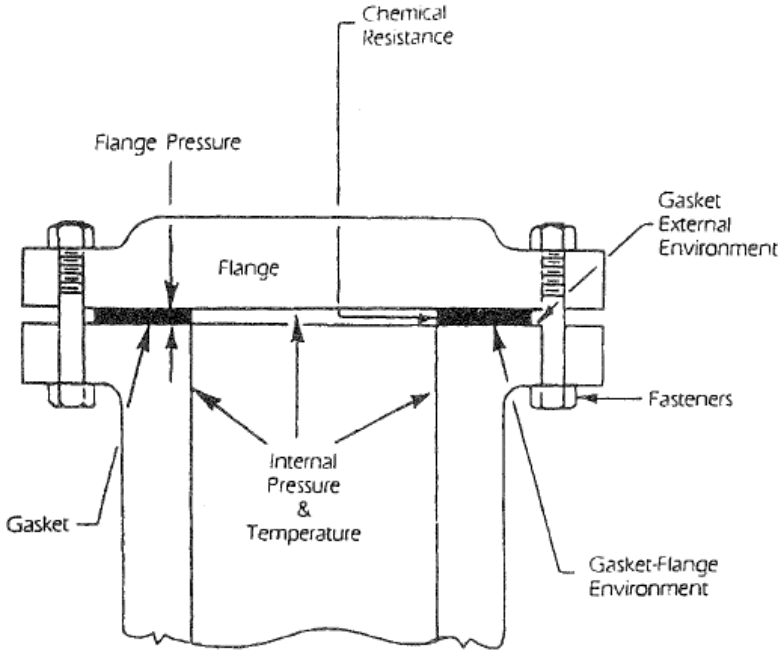

Figure 1 Forces acting on a gasket.

A gasket is required to be conformable to flange surfaces, it must exhibit resistance to temperature, pressure, chemical attacks and remain tight at all service conditions (Figure 1).

Fundamentally all static gaskets belong to one of the following categories:

- non-metallic (elastomers, cork, compressed fiber, graphite, PTFE etc.);
- semi-metallic (spiral wound, clad joints, kammprofile etc.);
- metallic (ring joints, lens rings etc.).

Very basic reasons for bolted joint assembly failures are summarised in Table 1.

Table 1 Joint assembly failures.

	Assembly • Lack of initial compression

COPY COMPLIANT to the original document resident on the computer system at the time of printing

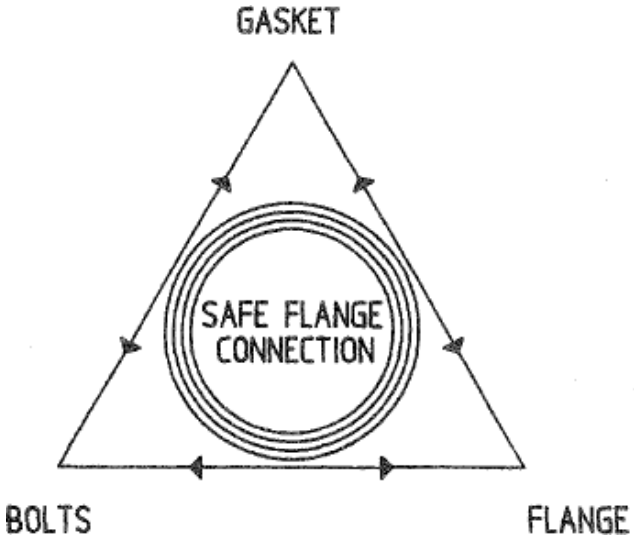

- Uneven bolting load
- Bad threads on bolt/stud
- Incorrect quality bolts
- Misalignment of the gasket

Metal faces

- Uneven, dirty, damaged, corroded
- Rotation of flanges

Gasket material

- Reuse of old gasket
- Incompatibility between gasket and medium
- Operating conditions that exceed the gasket limitations
- Incorrect dimensions
- Permeability of material

Design factor

- Insufficient bolt load (low gasket stress)
- Excessive bolt load (high gasket stress)
- Weak flange/poor bolting arrangement

As universally agreed, a totally leak-free joint cannot exist (the gasket is not ideally tight, porosity, etc…), in any case, the allowable level of leakage must be determined based on the grade of criticality of the application.

4.2. Tightness and leakage.

Tightness is a measure of the ability to control the leak rate of the joint for a given load: with all other variables equal, a tighter gasket requires higher internal pressure to push the same rate of fluid through the joint.

Mass leak rate L_{rm} is strongly correlated to fluid pressure for a given load level: L_{rm} should increase in proportion to pressure p on a log-log plot (Figure 2), if the gasket stress S_g is maintained constant.

COPY COMPLIANT to the original document resident on the computer system at the time of printing

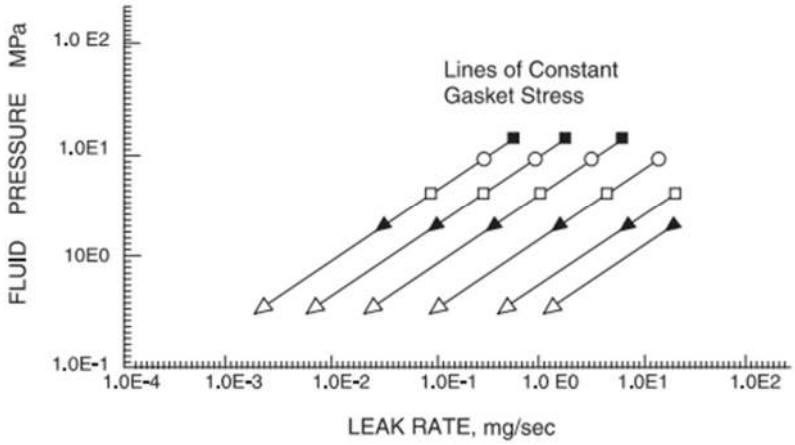

Figure 2 Leak rate vs. fluid pressure.

This relationship between pressure and leak rate for a specific gasket stress can be expressed as:

$$p = costant \times (L_{rm})^s$$

This linear relationship of slope s in logarithmic coordinates has led to the definition of a non-dimensional tightness parameter T_p. An exponent s of 0.5 has been adopted to standardize the use of tightness with a single value of a for the new rules.

$$T_P = \frac{p}{p^*}\left(\frac{L^*_{rm}}{L_{rm}}\right)^{0.5} \quad [-]$$

$$p = internal\ pressure\ [MPa]$$

$$p^* = atmospheric\ pressure\ [MPa]$$

$$L^*_{rm} = unit\ mass\ leak\ rate\ (1\frac{mg}{s}\ for\ a\ 150\ mm\ OD\ gasket\ in\ a\ joint)$$

$$L_{rm} = mass\ leak\ rate\ [\frac{mg}{s}]$$

T_p. is made non-dimensional by introducing the reference leak L^*_{rm} for a reference diameter of 150 mm.

Basically, the sealing performance of most gaskets can be depicted as straight lines on a log-log plot of gasket stress S_g vs. the tightness parameter T_p. Tests show that leakage is an unclear function of gasket width, and more experimental work is needed on gasket width. Therefore, at present, all gasket stresses are based on the full width in contact with the flange faces.

COPY COMPLIANT to the original document resident on the computer system at the time of printing

5. Traditional rules (ASME BPVC Appendix 2).

ASME Boiler & Pressure Vessel Code Appendix 2 provides mandatory design "Rules for Bolted Flanged Connections with Ring Type Gaskets," where the gasket is within the circle defined by the bolt holes. ASME also suggests (but does not mandate) a specific gasket factor, m, and a minimum gasket seating stress, y (Annex B: ASME BPVC gasket tables.). These helps establish a design bolt load for the joint, which, in turn, is used to verify that the flange geometry is satisfactory for the governing design conditions, by means of a stress analysis.

Table 2 ASME BPVC Procedure.

step 1	$define\ m\ and\ y\ from$ Annex B: ASME BPVC gasket tables.
step 2	$define\ b_0\ and\ b\ from$ Annex B: ASME BPVC gasket tables.
step 3	$G = \begin{cases} \frac{(ID+OD)}{2}\ if\ b \leq 6mm \\ OD - 2b\ if\ b > 6mm \end{cases}\ (diameter\ at\ location\ of\ gasket\ load)$
step 4	$A_i = \frac{\pi}{4} G^2\ (wet\ area)$
step 5	$A_g = 2b\pi G\ (gasket\ area)$
step 6	$W_{m1} = pA_i + S_g A_g\ (minimum\ required\ bolt\ load\ for\ operating\ conditions)$
step 7	$W_{m2} = \frac{yA_g}{2}\ (minimum\ required\ bolt\ load\ for\ gasket\ seating)$
step 8	$W = \max(W_{m1}, W_{m2})\ (required\ bolt\ load)$

The m and y factors were introduced by ASME in 1943. They are *empirical* factors and not based on actual leakage testing:

- the y factor is the stress required to achieve an initial seal between the gasket and the mating faces (the stress must be sufficient to force the gasket material into any voids and or irregularities in the sealing surfaces);
- the m factor is a multiplier or maintenance factor used to ensure that the design is sufficient to hold the flange assembly together and maintain a certain additional stress on the gasket.

The ASME code uses these factors only to ensure mechanical adequacy of the flanges and bolting: <u>use of them does not ensure acceptable sealing performance.</u>

COPY COMPLIANT to the original document resident on the computer system at the time of printing

From this point ASME BPV Code Appendix 2 requires a stress analysis of the flange in question that will verify that the flange stresses are acceptable for these bolt loads. There is no consideration of leak rate or tightness, external loads, or the method of assembly

The design bolt load for the joint with circular gasket, calculated for operating and for seating requirements, is calculated following the procedure in Table 2.

For non-circular gasket calculations are similar, starting from step 6 after evaluating both A_g and A_i from flanges geometry.

A calculation sheet *Mod.498 - ASME BPVC gasket selection.xlsx* is available to perform gasket selection following ASME rules.

COPY COMPLIANT to the original document resident on the computer system at the time of printing

6. Tightness-based rules (PVRC).

As previously explained, tightness parameter T_p. can be expressed as:

$$T_P = \frac{p}{p^*}\left(\frac{L^*_{rm}}{L_{rm}}\right)^{0.5}$$

There is a linear relationship in log-log plot between gasket seating stress S_g and tightness parameter T_p.

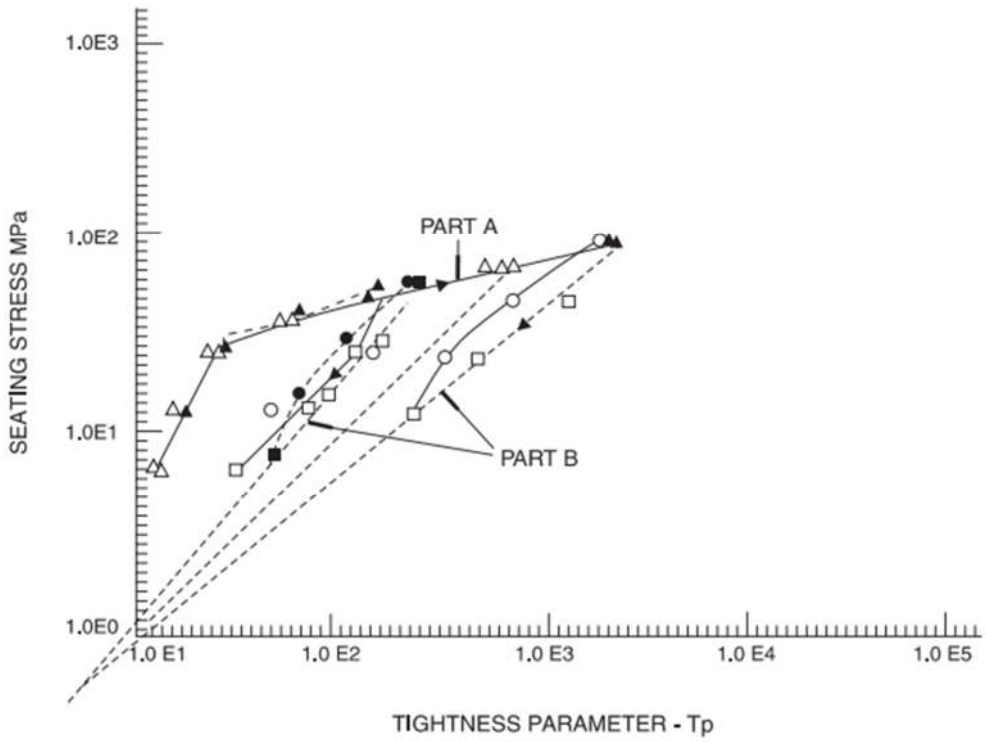

From the chart it is possible to define the new gasket constants:

- G_b is the intersection point of loading curve (part A) with T_p=1.0;
- a is the slope of loading curve;
- G_s is the intersection point of unloading curve (part B) with T_p=1.0.

COPY COMPLIANT to the original document resident on the computer system at the time of printing

6.1. Standard leak.

For design purposes the unit mass leak rate l_{rm} is defined as:

$$l_{rm} = \frac{L_{RM}}{OD}$$

$$l_{rm} = unit\ mass\ leak\ rate\ [\frac{mg}{s\ mm}]$$

$$L_{rm} = mass\ leak\ rate\ [\frac{mg}{s}]$$

$$OD = outside\ diameter\ [mm]$$

To have bolted joint designs that are based on a practical concept of leak rate, various levels of leakage have been defined. These are keyed to a leak l_{rm} of 0.002 mg/sec per mm of gasket diameter, which is called a "standard" leak of tightness class T2. Table 3 summarises tightness classes, unit mass leak rate and tightness constant T_c.

Table 3 Tightness class.

Tightness class	*application*	T_c	$l_{rm}[\frac{mg}{s\ mm}]$
T1	water/air class	0.1	0.2
T2	standard class	1.0	0.002
T3	tight class	10.0	0.00002

6.1. Minimum tightness.

Coupled with the standard leak, the required minimum tightness $T_{p\,min}$[1] for design is:

$$T_{p\,min} = 1.8257\,T_c\left(\frac{p}{p^*}\right)\ (dimensionless)$$

or

$$T_{p\,min} = 18.023\,T_c\,p\ (pressure\ in\ MPa)$$

[1] Referring to standard class T2, $T_c=1$,

$$L_{rm} = l_{rm} \times 150\ mm = 0.002 \times 150\ \frac{mg}{s} = 0.3\frac{mg}{s} \Rightarrow T_p = \frac{p}{p^*}\left(\frac{L^*_{rm}}{L_{rm}}\right)^{0.5} = \frac{p}{p^*}\left(\frac{1.0\ \frac{mg}{s}}{0.3\ \frac{mg}{s}}\right)^{0.5} = 1.8257\frac{p}{p^*}$$

COPY COMPLIANT to the original document resident on the computer system at the time of printing

$T_{p\,min}$ is the tightness parameter required to ensure satisfactory leakage performance in operation for the specified tightness class.

6.1. Gasket selection procedure.

Table 4 and Figure 3 summarise the procedure for gasket dimensioning following PVRC rules.

Table 4 PVRC Procedure.

step 1	$define\ the\ wet\ area\ A_i\ and\ the\ gasket\ A_g$
step 2	$define\ gasket\ parameters\ G_b, G_s, S_U, S_L, m\ and\ a$
step 3	$define\ tightness\ class\ (T1, T2\ or\ T3)\ \ and\ T_c$
step 4	$T_{p\,min} = 18.023\ T_c\ p\ (minimum\ tightness)$
step 5	$define\ the\ total\ tightening\ force\ F_{bolt}$
step 6	$S_a = \frac{F_{bolt}}{A_g}\ (assembly\ gasket\ stress)$
step 7	$S_a \leq S_U\ (1^{st}\ limit\ conditions)$
step 8	$T_{p\,a} = \left(\frac{S_a}{G_b}\right)^{1/a}\ (assembly\ tightness)$
step 8	$T_{p\,a} \geq T_{p\,min}\ \frac{p_{hydrotest}}{p}\ (2^{nd} limit\ condition)$
step 9	$T_r = \frac{log(T_{p\,a})}{log(T_{p\,min})}\ (tightness\ ratio)$
step 10	$S_{m1} = G_s \left(\frac{S_a}{G_s}\right)^{\frac{1}{T_r}}\ (minimum\ required\ gasket\ stress)$
step 11	$S_{m2} = S_a - p\frac{A_i}{A_g}\ (gasket\ stress\ after\ application\ of\ internal\ pressure)$
step 12	$S_{m2} \geq \max(S_{m1}, S_L, m \times p)\ (3^{rd}\ limit\ condition)$

Some iterations are required to find the minimum bolt load respecting all the three limit conditions; anywhere, a so called "convenient method" exists without iteration: $T_{p\,a}$ is considered equal to $T_{p\,min}$ multiplied by the ratio between $p_{hydrotest}$ and p.

COPY COMPLIANT to the original document resident on the computer system at the time of printing

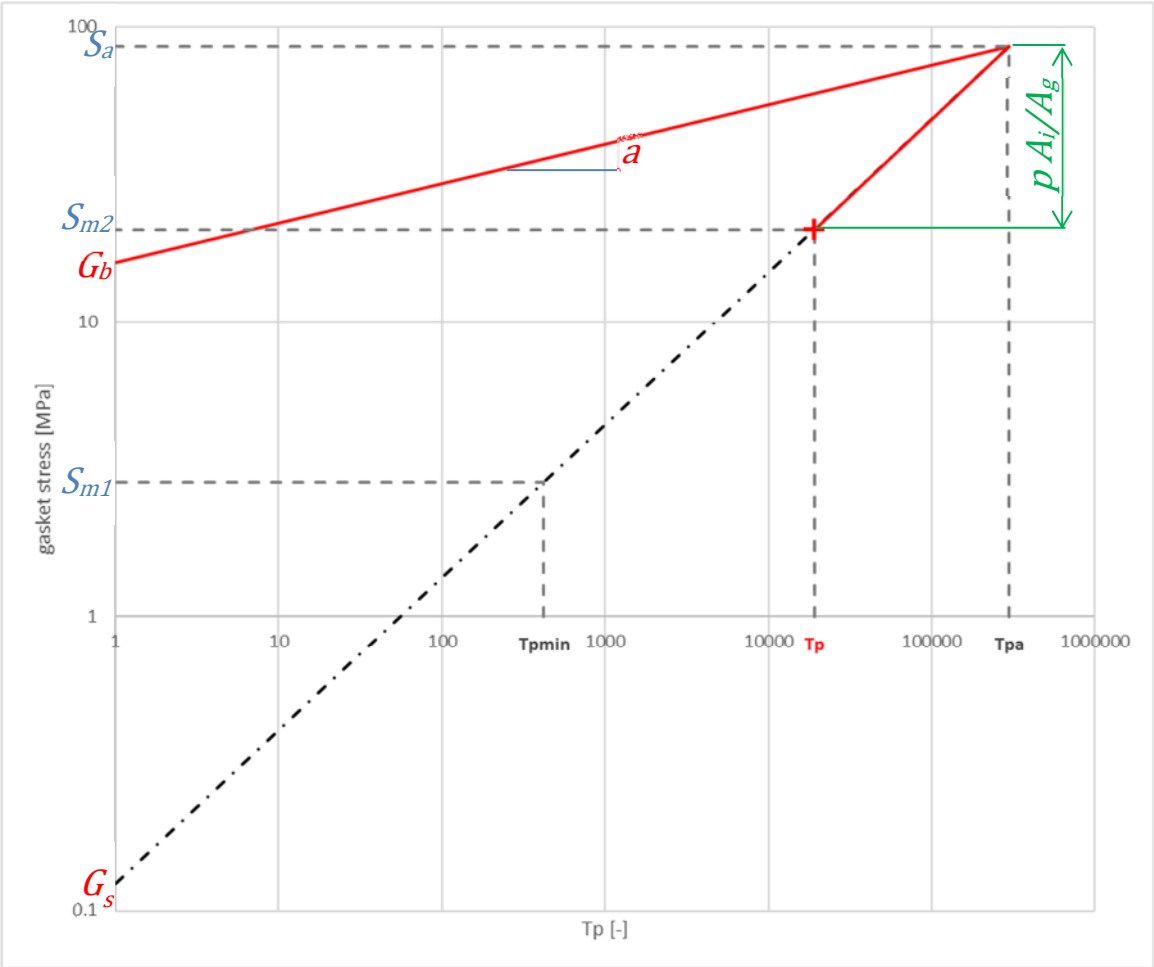

Figure 3 PVRC verification.

A calculation sheet *Mod.501 - PVRC gasket selection.xlsm* is available to perform gasket selection following PVRC rules (iterative method).

COPY COMPLIANT to the original document resident on the computer system at the time of printing

7. Gasket loading/unloading curves.

Unlike previous methods, to considers elastic and plastic deformations of the seal it is necessary to develop the loading/unloading curves of the gasket (Figure 4). These data can be integrated into a finite element model to describe the non-linear behaviour of the joint and to determine both gasket deflection and stress: if the gasket compression is greater than a minimum required level, the leakage is safely prevented.

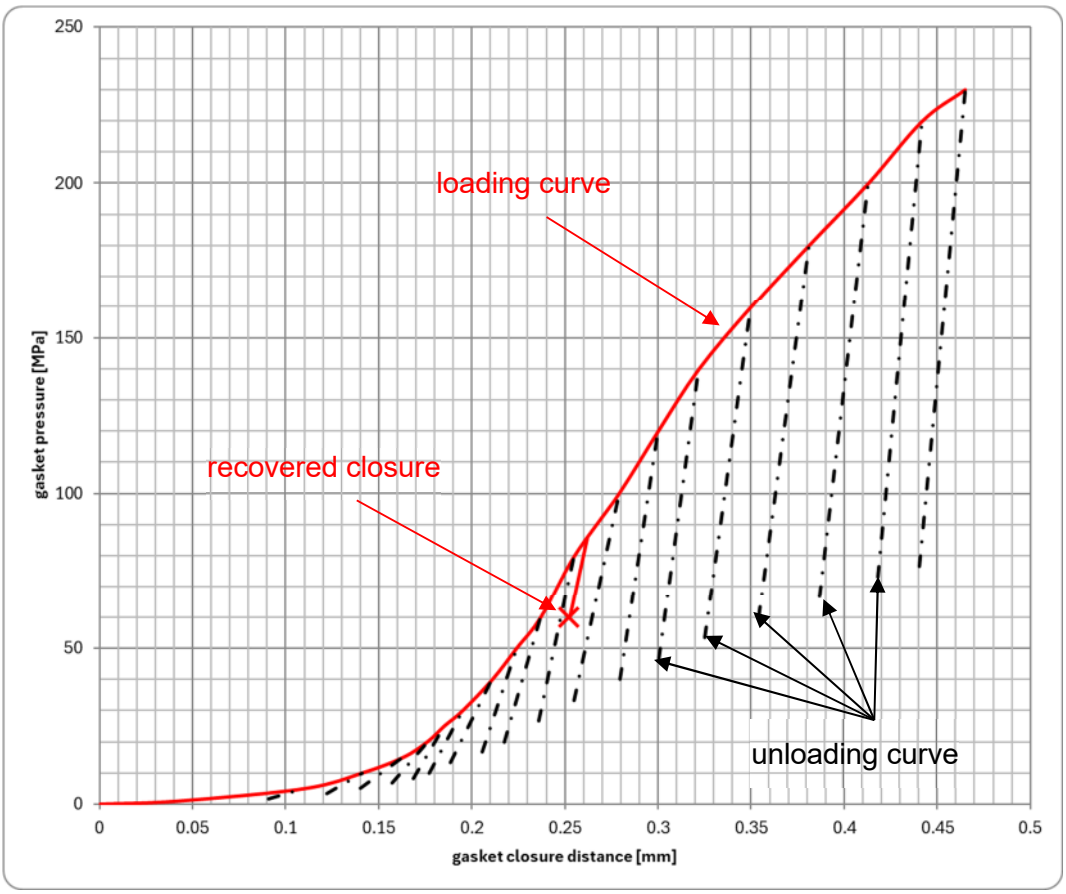

Figure 4 Gasket curves.

A source of data to create this diagram can be specialized gasket database like [The gasket database](), [Home - ESA Gasket Database](), or directly gasket manufacturer. Information required are:

- the surface pressure at assembly condition Q_A [MPa];
- unloading secant modulus of elasticity of the gasket E_G [MPa];
- gasket thickness at assembly condition e_{Q_A} [mm].

COPY COMPLIANT to the original document resident on the computer system at the time of printing

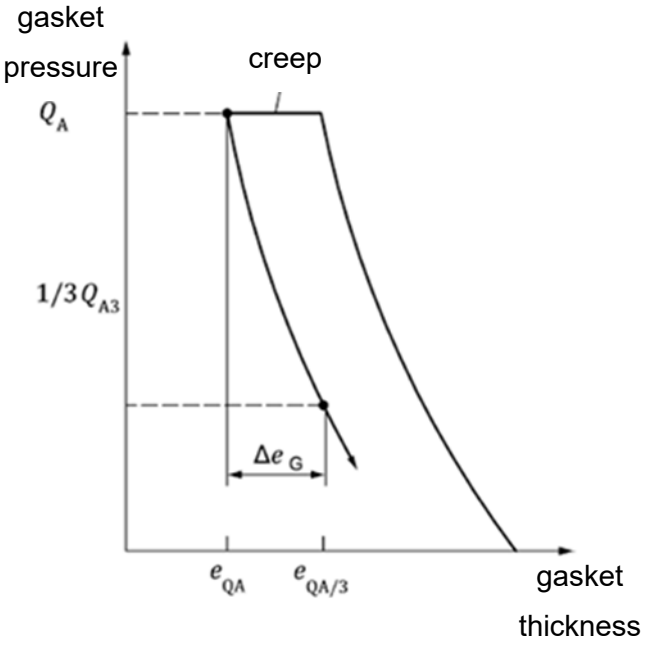

Figure 5 Unloading modulus of elasticity.

E_G is determined from the thickness recovery of the gasket between the initial compression surface pressure and unloading to a third of this initial surface pressure.

$$E_G = \frac{2}{3} Q_A \times \frac{e_{Q_A}}{\Delta e_G}$$

A calculation sheet *Mod.499 - Gasket loading-unloading curves.xlxm* is available to generate the diagram in Figure 4. It is also possible to calculate the gasket thickness at assembly and with internal pressure (considering averaged values).

COPY COMPLIANT to the original document resident on the computer system at the time of printing

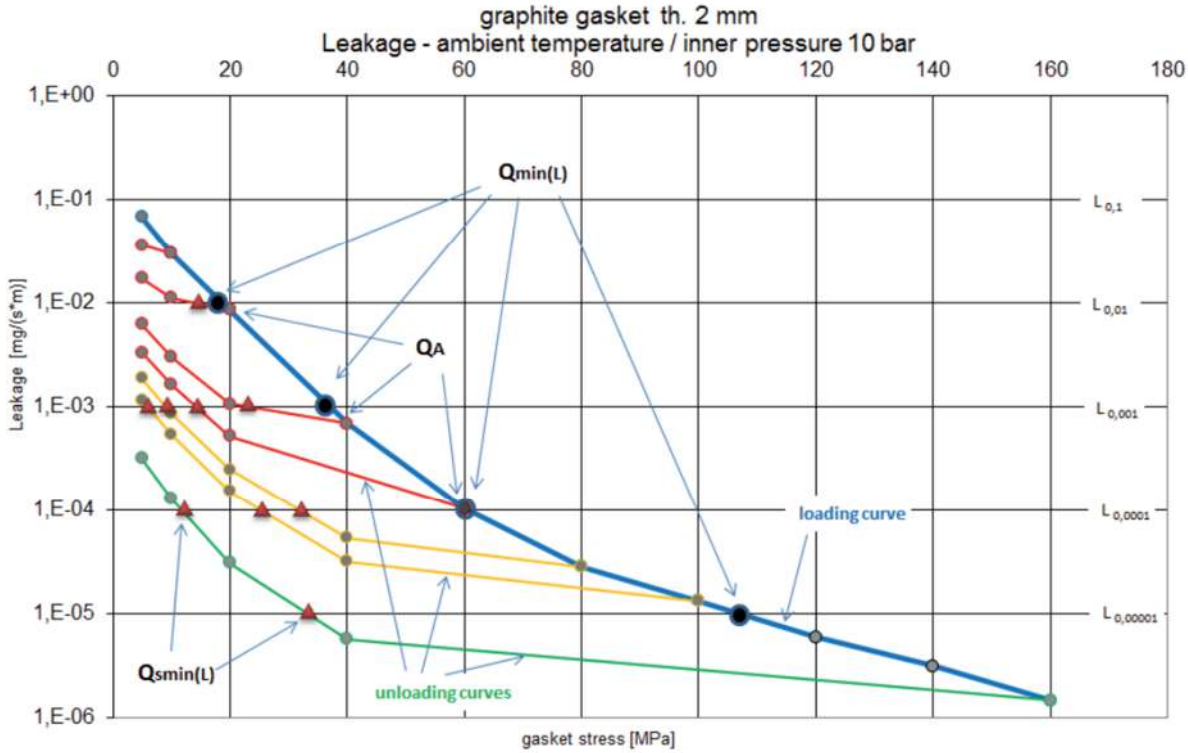

Figure 6 Gasket Leakage vs. stress.

Figure 6 shows the correlation between gasket stress and leakage for fixed internal pressure. Main parameters of Figure 6 are:

- the minimum level of surface pressure required to obtain the tightness class on assembly $Q_{min(L)}$ [MPa];
- the minimum level of surface pressure required to retain the tightness class after off-loading $Q_{smin(L)}$ [MPa].

For example, let assume that during operation a tightness class equal to 0.0001 mg/(m s) needs to be maintained. If gasket stress decrease to 20 MPa in operation, due to internal pressure, etc…, only the green unloading curve (initial gasket stress equal to 160 MPa) is available.

COPY COMPLIANT to the original document resident on the computer system at the time of printing

8. References

- *ASME BPVC Section VIII div. I – Mandatory Appendix 2 Rules for Bolted Flange Connections with Ring Type Gaskets*
- *EN 13555:2001 - Flanges and their joints - Gasket parameters and test procedures relevant to the design rules for gasketed circular flange connections*
- *EN 1591-1:2014 Flanges and their joints – Design rules for gasketed circular flange connections – Part 1: Calculation*
- *Gaskets and Gasketed Joints – John H. Bickford*
- *Industrial Gaskets – Jose Carlos Veiga*
- *Mod.498 - ASME BPVC gasket selection*
- *Mod.499 - Gasket loading-unloading curves*
- *Mod.501 - PVRC gasket selection*

COPY COMPLIANT to the original document resident on the computer system at the time of printing

9. Annex A: Open gasket vs. controlled compression gasket.

An open gasket is used in an arrangement where the compression of the gasket is not limited by the geometry of the parts being sealed. The amount that the gasket can be compressed is limited only by the strength of the bolting and the method of tensioning.

A controlled compression gasket (as the name implies) is used with geometry that limits the compression that can be placed on the gasket. This is normally done through use of a groove or recess machined into one of the parts to be sealed.

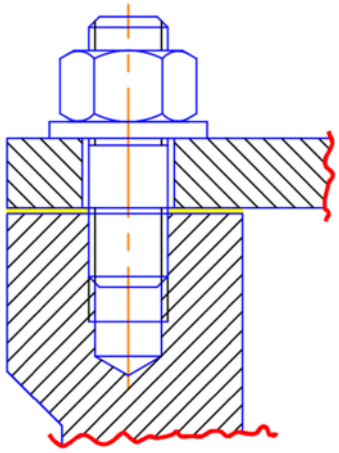

Figure 7 Open gasket

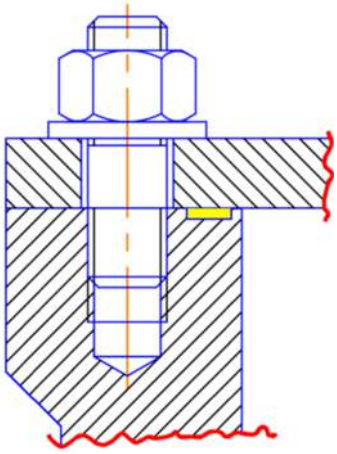

Figure 8 Compression controlled.

attribute	open	controlled compression
Large surface areas can be sealed regardless of profile or geometry at the part join	ok	limited (circular, oval)
Additional gasket tightness can be achieved by increasing the bolting torque	ok	not ok
Upon gasket failure, jetting of fluid to atmosphere is minimized	not ok	ok
High pressure capability (≈310 bar API 610)	not ok	ok
High temperature capability (≈200°C API 610)	not ok	ok

COPY COMPLIANT to the original document resident on the computer system at the time of printing

10. Annex B: ASME BPVC gasket tables.

Facing Sketch (Exaggerated)			Basic Gasket Seating Width b_0	
			Column I	Column II
(1a)	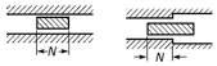		N/2	N/2
(1b)	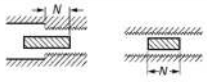			
(1c)		w≤N	max((W+T)/2;(w+N)/4))	max((W+T)/2;(w+N)/4))
(1d)	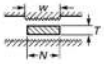	w≤N see note 1		
(2)	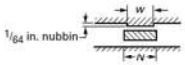	w≤N/2	(w+N)/4	(w+3N)/8
(3)	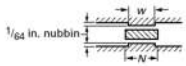	w≤N/2	N/4	3N/8
(4)			3N/8	7N/16
(5)			N/4	3N/8
(6)			w/8	...
Effective Gasket Seating Width b $b = b_0 \; when \; b \leq 6mm; b = 0.5\sqrt{b_0} \; when \; b > 6mm$				

COPY COMPLIANT to the original document resident on the computer system at the time of printing

GASKET MATERIALS AND CONTACT FACINGS

Gasket Material	Gasket Factor *m* [-]	Min Design Seating Stress *y* [MPa]	Sketches	Facing sketch	Column
Self-energizing types (o-rings, metallic, elastomer, other gasket types considered as self-sealing)	0.00	0	...	...	...
Elastomers without fabric or high percent of asbestos fiber: • below 75A Shore Durometer • 75A or higher Shore Durometer	 0.50 1.00	 0 1.4		(1a), (1b), (1c), (1d), (4), (5)	II
Asbestos with suitable binder for operating conditions: • 3.2 mm thick • 1.6 mm thick • 0.8 mm thick	 2.00 2.75 3.50	 11 26 45		(1a), (1b), (1c), (1d), (4), (5)	II
Elastomers with cotton fabric insertion	1.25	2.8		(1a), (1b), (1c), (1d), (4), (5)	II
Elastomers with asbestos fabric insertion (with or without wire reinforcement): • 3-ply • 2-ply • 1-ply	 2.25 2.5 2.75	 15 20 26	 	(1a), (1b), (1c), (1d), (4), (5)	II
Vegetable fiber	1.75	7.6		(1a), (1b), (1c), (1d), (4), (5)	II
Spiral-wound metal, asbestos filled: • carbon • stainless, monel, and nickel-base alloy	 2.50 3.00	 69 69		(1a), (1b)	II
Corrugated metal, asbestos inserted, or corrugated metal, acketed asbestos filled: • soft aluminium • soft copper or brass • iron or soft steel • monel or 4%–6% chrome • stainless steels and nickel-base alloys	 2.50 2.75 3.00 3.25 3.50	 20 26 31 38 45		(1a), (1b)	II
Corrugated metal: • soft aluminium • soft copper or brass • iron or soft steel • monel or 4%–6% chrome • stainless steels and nickel-base alloys	 2.75 3.00 3.25 3.50 3.75	 26 31 38 45 52		(1a), (1b), (1c), (1d)	II
Flat metal, jacketed asbestos filled: • soft aluminium • soft copper or brass • iron or soft steel • monel • 4%–6% chrome • stainless steels and nickel-base alloys	 3.25 3.50 3.75 3.50 3.75 3.75	 38 45 52 55 62 62		(1a), (1b), (1c), (1d), (2)	II
Grooved metal: • soft aluminium • soft copper or brass • iron or soft steel • monel or 4%–6% chrome • stainless steels and nickel-base alloys	 3.25 3.50 3.75 3.75 4.25	 38 45 52 62 70		(1a), (1b), (1c), (1d), (2), (3)	II
Solid flat metal: • soft aluminium • soft copper or brass • iron or soft steel • monel or 4%–6% chrome • stainless steels and nickel-base alloys	 4.00 4.75 5.50 6.00 6.50	 61 90 124 150 179		(1a), (1b), (1c), (1d), (2), (3), (4), (5)	I
Ring joint: • soft aluminium • soft copper or brass • stainless steels and nickel-base alloys	 5.50 6.00 6.50	 124 150 179		(6)	I

COPY COMPLIANT to the original document resident on the computer system at the time of printing